# Firm Round Thermostatic Shower Black - MSSHFIROBL

MY STYLE

| | |
|---|---|
| **CONSTRUCTION** | Brass Body (CuZn38Pb18); ABS Handle |
| **FINISHES** | Matt Black Electro Plated |
| **PRODUCT TYPE** | Contemporary |
| **WATER PRESSURE** | Min. 0.5 Bar, Max. 6.0 Bar |
| **PLUMBING SYSTEMS** | Suitable for All Plumbing Systems,<br>Max. Supply Pressure Differential Requirement No Greater Than 5:1 |
| **STANDARDS** | Complies with BSEN 1111 |
| **CERTIFICATION** | WRAS Approved and Certified |
| **CARTRIDGE** | On/Off - Alfano<br>Thermostatic - Agua |
| **NET WEIGHT** | 3.3 Kg |
| **VALVE** | Integrate Diverter Ceramic Valve |
| **CHECK VALVE** | 0.5-10 GMP |
| **ADDITIONAL INFORMATION** | • Temperature: Pre-set 38°C, with Push Button Override to 48°C.<br>• Automatic Shut off in the event of Hot or Cold Water Supply Failure.<br>• Shower Head: Black, Ø200mm, Stainless Steel<br>• Shower Handset: Black, 3 Mode, ABS<br>• Shower Hose: Black Stainless Steel, 1.5m<br>• Riser Rail: Adjustable Height Riser Rail |

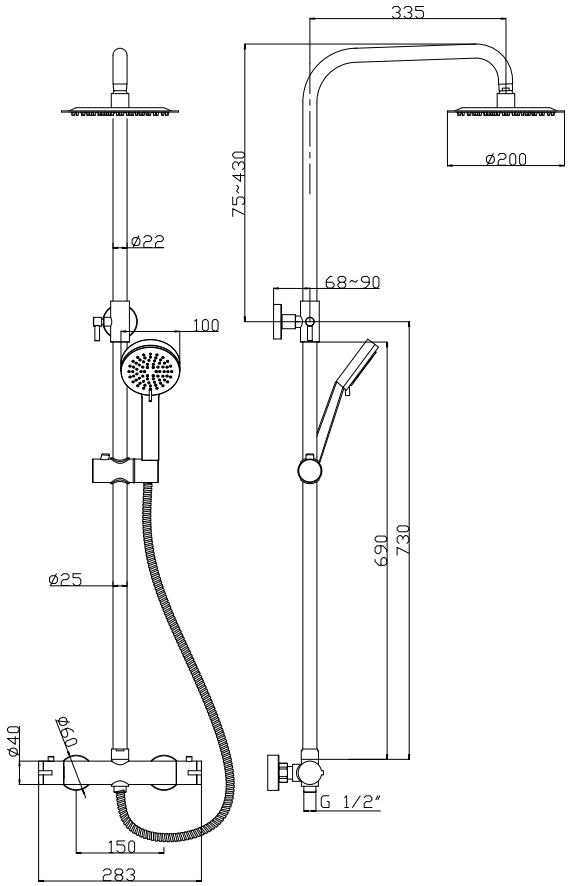


**Flow Rates** (Litres per minute)

| SYSTEM PRESSURE | 0.1 Bar | 0.2 Bar | 0.3 Bar | 0.5 Bar | 1.0 Bar | 1.5 Bar | 2.0 Bar | 3.0 Bar | 4.0 Bar | 5.0 Bar |
|---|---|---|---|---|---|---|---|---|---|---|
| SHOWER HEAD | - | 2.15 | - | 5.83 | 8.08 | 10.17 | 12.01 | 13.57 | 14.94 | 19.53 |

The information contained on this page was correct at date of issue. Fitting dimensions are provided as a guide only. Some variation may occur due to manufacturing tolerances. We pursue a policy of continuing improvement in design and performance of our products and so reserve the right to change specifications without prior notice.